LOCKMART
Lock Smart.
266 Broadway, Suite 302 Brooklyn, NY 11211
P: 877-266-0096 F:877-266-2814

UNIVERSAL FIRE RATED ACCESS DOOR

Model KRP-150FR

For Walls and Ceilings

KARP
The World's Leading Manufacturer of Access Doors

DATE

PROJECT DATA
Project Name:
Architect:
Contractor:
Agent/Customer Name:
Tagging Instructions:
Special Instructions:

PROJECT SCHEDULE

Qty.	H	W	No. of Latches	Finish	Remarks

GENERAL SCOPE:
The KRP-150FR is insulated and rated by Underwriters Laboratories for 1.5 hour " B" label in walls, and may be used in a 2 hour fire rated wall assembly. Additionaly, Warnock Hersey rated the KRP-150FR for 3 hours in ceilings.

CONSTRUCTION:
1. Frame shall be 16 gage steel.
2. Door shall be 20 gage steel, welded pan type.
3. Flange shall be 16 gage steel, 1" wide.
4. Hinge shall be exposed, continuous piano hinge.
5. Door shall be filled with 2" thick fire rated insulation.
6. Door shall have automatic closure, be self-latching, and contain interior latch release.
7. Latches shall be spring loaded sliding bolt type, keyed paddle latch, all keyed alike. Door can be prepared for a rim cylinder lock.
8. Finish shall be prime coat of rust inhibitive electrostatic powder, baked enamel. Stainless steel doors shall have #4 satin finish.

FIRE-RATED ACCESS DOOR INSTALL IN SHEET ROCK, MASENRY, TILE OR PLASTER.
Note: For installation in 3 hour ceiling system, on sizes 16" x 16" and larger, extra spring supplied with door must be attached from back of door pan to framing of floor above in such a manner as to insure that a door is self-closing.

STANDARD SIZES

DOOR SIZE H X W (IN.)	WALL/CEILING OPENING (IN.)	NUMBER OF LATCHES	SHIP WT. (LBS.)
8 x 8	8 3/8 x 8 3/8	1	6.3
12 x 12	12 3/8 x 12 3/8	1	9.7
14 x 14	14 3/8 x 14 3/8	1	12.7
16 x 16	16 3/8 x 16 3/8	1	14.1
18 x 18	18 3/8 x 18 3/8	1	18.9
24 x 12	24 3/8 x 12 3/8	1	15.5
22 x 22	22 3/8 x 22 3/8	1	24.0
24 x 24	24 3/8 x 24 3/8	1	26.7
30 x 22	30 3/8 x 22 3/8	1	27.8

DOOR SIZE H X W (IN.)	WALL/CEILING OPENING (IN.)	NUMBER OF STUD LATCHES	SHIP WT. (LBS.)
30 x 24	30 3/8 x 24 3/8	1	32.2
*30 x 30	30 3/8 x 30 3/8	1	37.7
*32 x 32	32 3/8 x 32 3/8	1	41.3
36 x 22	36 3/8 x 22 3/8	2	34.4
36 x 24	36 3/8 x 24 3/8	2	40.2
*36 x 36	36 3/8 x 36 3/8	2	52.0
*48 x 24	48 3/8 x 24 3/8	2	48.9
*48 x 36	48 3/8 x 36 3/8	2	62.0
*48 x 48	48 3/8 x 48 3/8	2	89.0

* All doors with width greater than 24" are for wall installation only. They are not approved for ceiling installation.

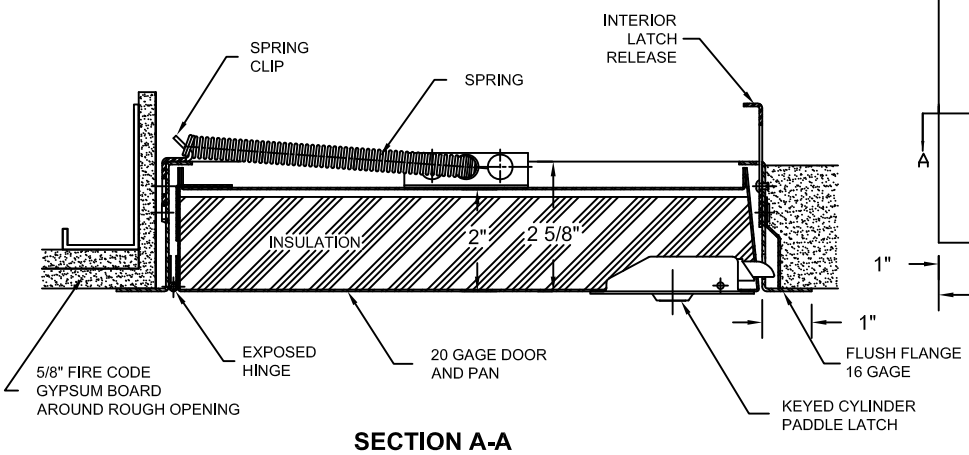

SECTION A-A

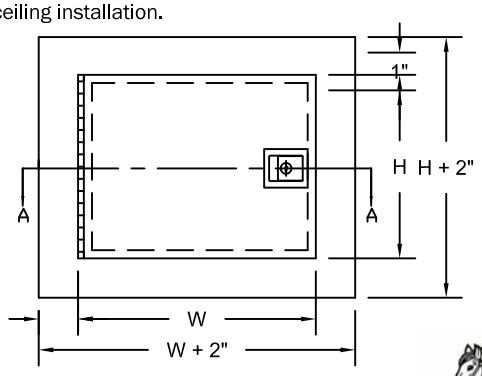

Made with Union Labor